IEA INTERNATIONAL ENERGY AGENCY

Common Practices for Protection Against the Effects of Lighting on Stand-Alone Photovoltaic Systems

PVPS

PHOTOVOLTAIC POWER SYSTEMS PROGRAMME

IEA PVPS T3-14:2003

IEA PVPS
International Energy Agency
Implementing Agreement on Photovoltaic Power Systems

Task 3
Use of Photovoltaic Power Systems in Stand-Alone and Island Applications

Report IEA PVPS T3-14: 2003

<Common practices for protection against the effects of lightning on stand-alone photovoltaic systems>

October 2003

Table of contents

Foreword **4**

Executive summary **5**

1 Introduction **6**

2 Scope and objectives **6**

3 Definitions, symbols and abbreviations **6**

4 Recommendations for lightning protection **7**

4.1 Protection against direct lightning 7

4.2 Protection against indirect lightning 7

4.3 Lightning risk evaluation for PV installations 15

5 Protection measures for PV installations **16**

6 Case studies **17**

6.1 Solar home power supply system (SHS) 17

6.2 Isolated household power supply system 19

6.3 Mountain hut power supply system 22

6.4 Radio relay power supply system 24

6.5 Hertzian beam power supply system 27

6.6 Pumping power supply system 31

7 Annex: Types of low voltage distribution systems earthing **35**

7.1 Type of system earthing for a.c. systems 36

7.2 Type of system earthing for d.c. systems 38

Foreword

The International Energy Agency (IEA), founded in November 1974, is an stand alone body within the framework of the Organisation for Economic Co-operation and Development (OECD), which carries out a comprehensive programme of energy co-operation among its 24 member countries. The European Commission also participates in the work of the Agency.
The IEA Photovoltaic Power Systems (PVPS) Programme is one of the collaborative R&D agreements established within the IEA and, since 1993, its Participants have been conducting a variety of joint projects in the applications of photovoltaic conversion of solar energy into electricity.

The overall programme is headed by an Executive Committee composed of one representative from each participating country, while the management of individual research projects (Tasks) is the responsibility of Operating Agents. Currently nine tasks have been established. The twenty-one members of the PVPS Programme are:

Australia (AUS), Austria (AUT), Canada (CAN), Denmark (DNK), European Commission, Finland (FIN), France (FRA), Germany (DEU), Israel (ISR), Italy (ITA), Japan (JPN), Korea (KOR), Mexico (MEX), Netherlands (NLD), Norway (NOR), Portugal (PRT), Spain (ESP), Sweden (SWE), Switzerland (CHE), United Kingdom (GBR), United States (USA).

This Technical Report is proposed by Task 3 experts of the PVPS programme involved in "Use of Photovoltaic Power Systems in stand-alone and island applications"
It is a part of a study funded by the French Agency for Environment and Energy management (ADEME): "Protection guide against the effects of lightning in installations using renewable sources".
It has been mainly prepared by

- Gérard Moine and Jean-Christian Marcel, photovoltaic systems engineers, Transenergie (FRA)
- Alain Charoy, engineer expert in electromagnetic compatibility, AEMC, (FRA)

This report expresses, as nearly as possible, a consensus of opinion of the Task 3 experts of Australia, Germany, Italy, Japan, Norway, Portugal, Sweden, Switzerland and UK on the subjects dealt with.

Executive summary

This report first gathers general information about photovoltaic installations lightning protection measures and then describes lightning experts' recommendations for different specific installations. Six examples of common installations with photovoltaic systems, as listed below, are then separately considered:

- Solar home power supply system
- Isolated household power supply system
- Mountain hut power supply system
- Radio relay power supply system
- Hertzian beam power supply system
- Pumping power supply system

Recommendations made in this report are indicative. The solutions described will not guarantee 100% protection, but if applied, will serve to limit the extent of the damage caused by lightning events.

Keywords: Photovoltaic systems - Lightning - Protection

Résumé

Ce document présente des considérations générales à prendre en compte dans la protection de systèmes d'électrification à base de générateurs photovoltaïques contre les effets de la foudre et propose des recommandations d'experts sur la manière de protéger spécifiquement certaines installations. Six exemples sont ainsi présentés :

- Système d'électrification individuelle
- Système d'alimentation d'une habitation isolée
- Système d'alimentation d'un refuge de montagne
- Système d'alimentation d'un relais radio
- Système d'alimentation d'un système de télécommunications par faisceau hertzien
- Système d'alimentation d'une installation de pompage

Les recommandations proposées, données à titre indicatif, ne peuvent pas garantir une protection à 100% contre des effets destructifs mais leur mise en œuvre devrait conduire à une diminution sensible des dégâts occasionnés.

Mots clé : Systèmes photovoltaïques – Foudre – Protection

1 Introduction

Stand alone photovoltaic installations are equally at risk from lightning damage as are their grid connected counterparts, with the degree of remoteness amplifying the associated costs and consequences of an interruption to services. Experience shows that where lightning protection systems are installed, more often than not their design is poor and the protection they provide, ineffective. The problem becomes more serious for the industry, as the number of photovoltaic power plants increases.

2 Scope and objectives

These common practices aim to present the practical techniques commonly used by project managers and installers to set up lightning protection.

The techniques presented here may not be unique; other approaches may be used for your specific situation. This document does not supersede in any way your local electrical codes; please refer to them for proper installation requirements in your area.

3 Definitions, symbols and abbreviations

Ground: Ground earth. Connection to the earth potential for protection purpose.
In: SPD nominal discharge current
Imax: SPD maximum discharge current
PV: photovoltaic
RES: renewable energy sources
SPD: surge protective device
Uc: SPD voltage specification
Uoc: SPD maximum open circuit voltage
Up: voltage level of protection

4 Recommendations for lightning protection

4.1 Protection against direct lightning

When located outside the existing zone of protection on a building (see electro-geometrical pattern), a photovoltaic system needs a discreet protection device to protect it against lightning strikes. Two common situations are described in Figure 1. In the first case, a lightning conductor is not necessary whereas in the second case an additional protection is needed.

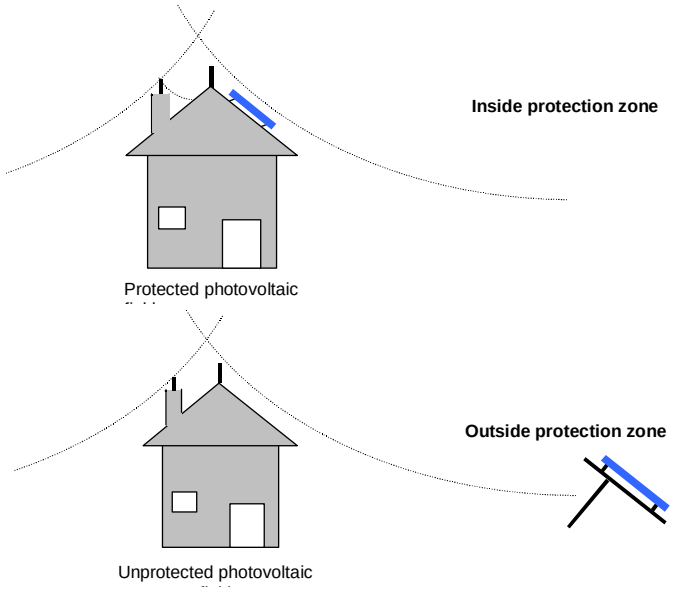

Figure 1: Examples of protection

4.2 Protection against indirect lightning

Damage to a system can be caused even when the strike is not direct. Protection against indirect lightning strikes involves several simultaneous measures:

- A single ground electrode,
- An equipotential network achieved by connecting all the metallic parts of the electric equipment to an ground,
- Arrangement of the cables to avoid loops that can produce over-voltage generation due to the rapidly varying magnetic field,
- Installation of lightning protectors connected to the protected equipment ground,
- Shielding of the telecommunications and data transmission cables.

Incorporation of these measures into stand-alone photovoltaic installations is detailed hereafter:

4.2.1 Single ground electrode and exposed-conductive-part bonding

The experiment shows that bonding problems are frequently the cause for most dysfunctions. For lightning and over voltage protection to be effective, the metal components of the power plant must be interconnected together and to a common ground, even if located on different buildings.
Figure 2 introduces some designs for ground bonding.

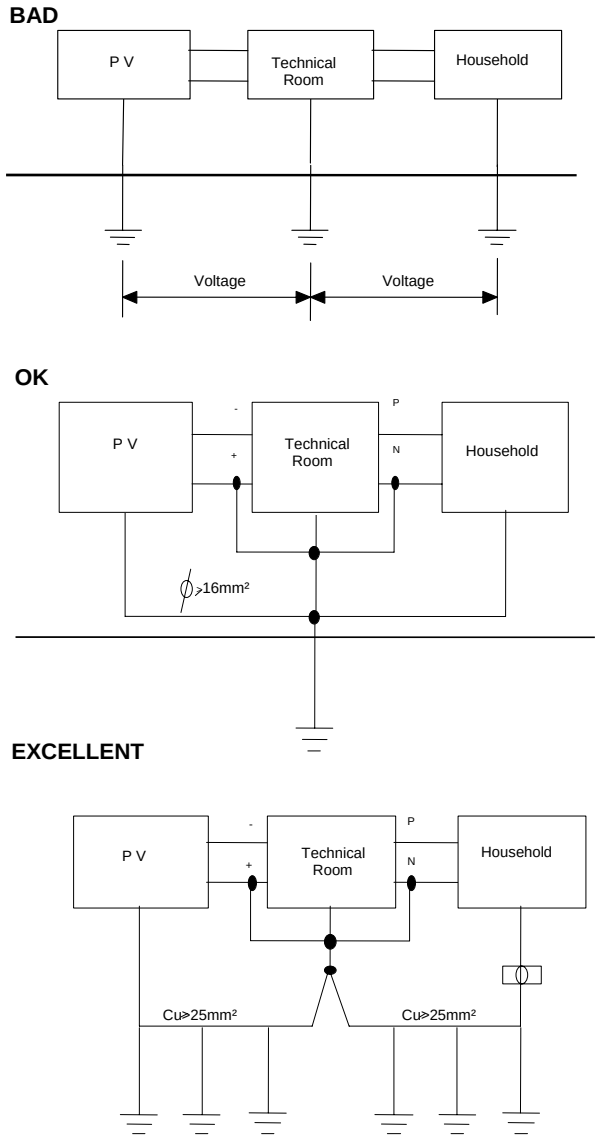

Figure 2: Examples of ground bonding

- ***Practical Implementation:***

Interconnection of the ground electrodes between the photovoltaic field and the electrical components can be done with:

- The green/yellow conductor protection (if it is present in the cable connection, and if its section is not under 16mm²)
- A bare copper cable with a section of at least 25 mm². If the cable is longer than 50 m, the exposed-conductive-part conductor should be buried to avoid the risk of it contacting the ground, which would damage the cables. Positioning ground conductors in close proximity to active conductors is highly recommended in order to limit the loop's surface.

If the equipotential connection is buried, the copper section should be at least 25 mm² to avoid corrosion problems.
Figure 3 gives an example of design for exterior equipotential connection.

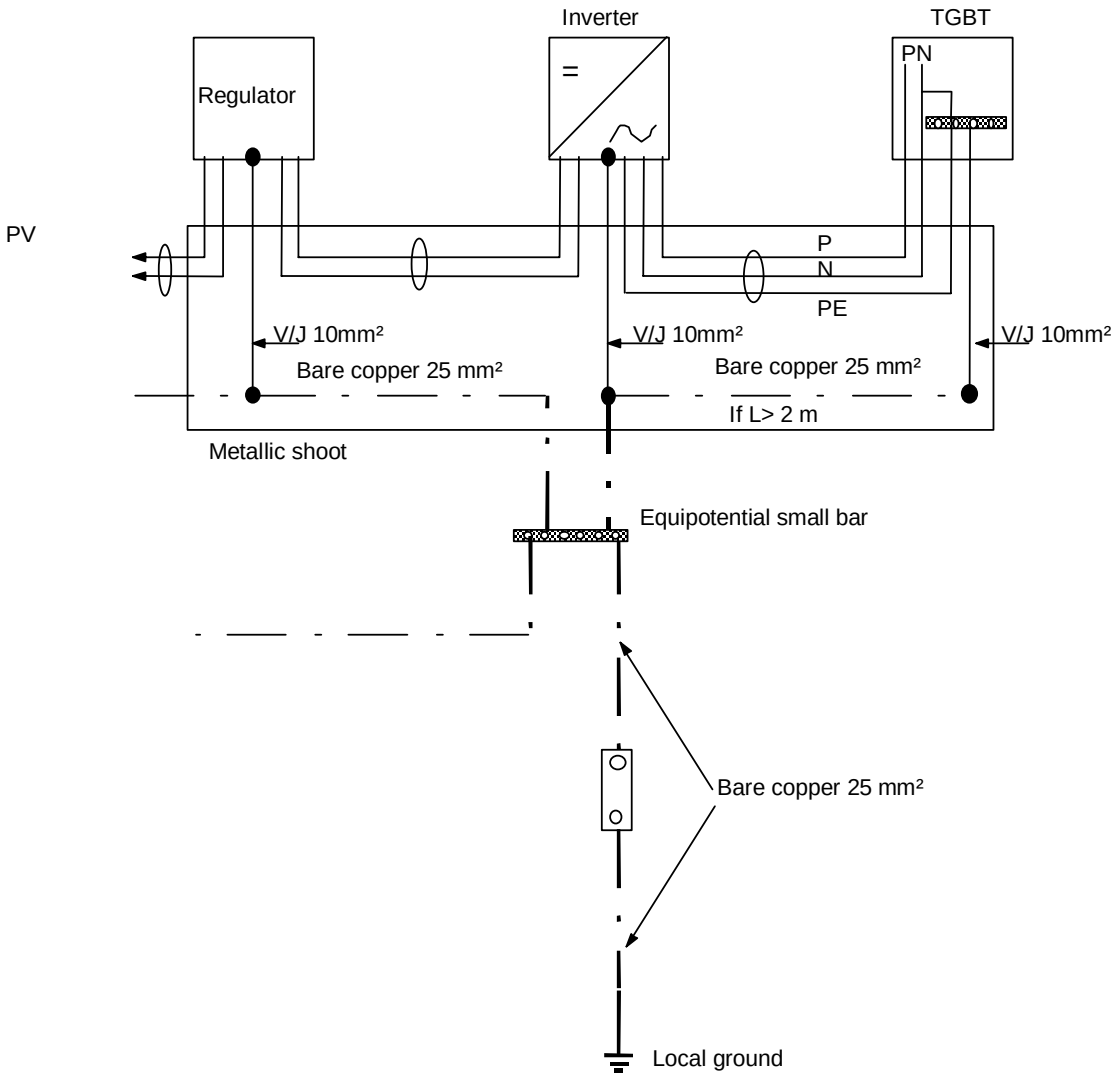

Figure 3: Exterior equipotential connection

Where there are several modules, they can be linked with a ground wire or 16 mm² green/yellow conductor.

More generally, active wiring should be ground connected near the point where the wires enter the building (metallic shoots and shielded cables). All the building's active metallic structures and modules should be ground connected. (same ground or seperate OK?)

NOTE:
When photovoltaic modules are installed on a roof equipped with a lightning conductor, a direct link between the metallic parts of the modules and the existing conductor is necessary to avoid a building up connection risk.
If the roof cladding is metallic, it should be connected with the equipotential conductor.

Electronic devices' (battery charge regulator, inverter, charger,…) metallic components that are less than 2 meters apart should be protected in the following manner:

- If the distance between the components and the bonding bar is less than 3 m, each component ground conductor should be directly connected to the bonding bar with a minimum 10 mm² section ground conductor.
- If the distance between the components and the bonding bar is in excess of 3 m, each component ground conductor should be directly connected to a common bare copper wire, which in turn is connected to the bonding bar.

These connections should be made even if there is a green/yellow conductor connecting the devices via a power supply cable.

Ground interconnection design is preferably meshed rather than star-spangled, especially if the interconnection cables are long.

4.2.2 Surge protection devices

- ***DC circuit ground connection scheme***

Surge Protection Devices (SPD) used on connections between the photovoltaic field and the electric components must be grounded, The method used will be influenced by the type of grounding system encountered.

Functionally, DC circuits can be grounded using either floating potential (see Figure 4) or ground connected polarity (see Figure 5).

Connecting to ground is mandatory for safety reasons where components or wiring are not Protection Class II, or where there is no permanent isolation controller.

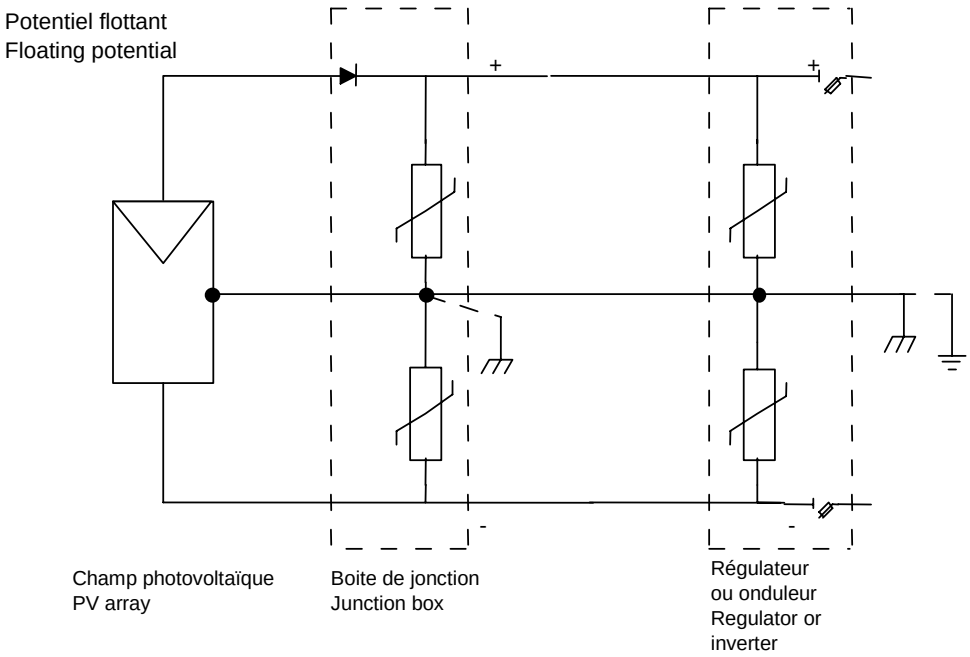

Figure 4: Floating potential case

This scheme can be applied for 12 V or 24 V installations. Nevertheless, it implies a overload protection for the two polarities.

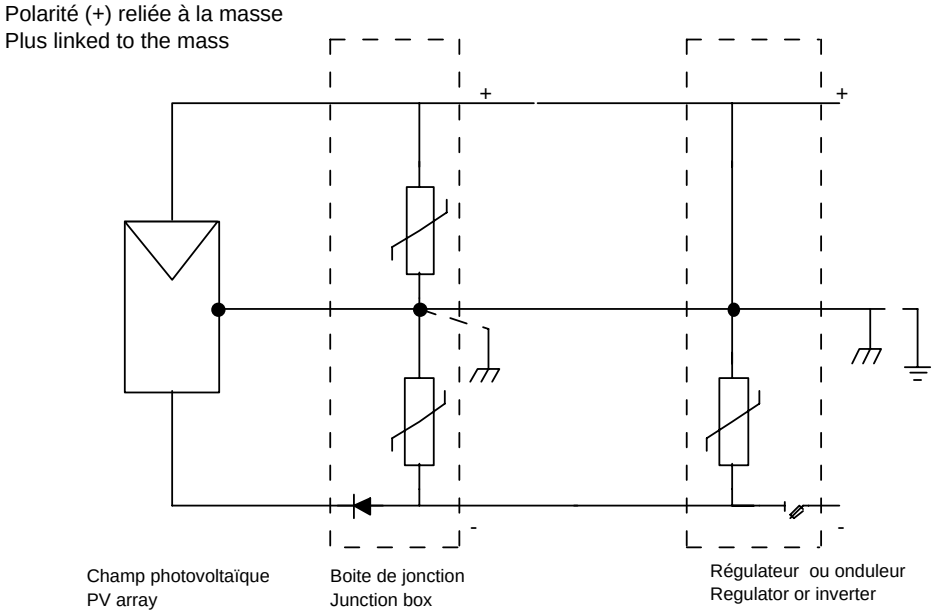

Figure 5: Ground connected polarity case

Ground connected polarity has the following advantages:

- Good protection from electromagnetic disturbances.
- Overload surcharge protection on only one polarity
- Personal protection when the installation has a nominal voltage ≥48V
- No permanent controller of insulation (PCI).

NOTE:

Either polarity can be connected to ground, however it is preferable to connect the positive polarity in order to avoid electrolytic corrosion of some components such as photovoltaic modules. The problem is magnified when a high nominal voltage is used, or in wet and saline ambient air conditions.

This configuration is already applied in the 48V telecommunications domain.

Connecting an active wire to the ground (when a DC polarity or the creation of an AC neutral is needed) must be done only at one point to prevent a default current circulating in the protection cable and preferably close to the system installation.

IMPORTANT:

To avoid the possibility of short circuits causing damage, protection (fuse, circuit breaker) and control components (relays, electronic switches) must be connected to the opposite polarity and the grounding circuitry checked for functionality, before the ground link is made.

- ***Location of the lightning protectors***

Surge protection devices (zinc type varistors, spark gaps, transient voltage suppressors, electronic crowbars, etc.) are installed at both sides of connections in order to protect equipment (photovoltaic modules and electronics) against indirect lightning strikes. If the connecting cable length does not exceed 10 m, then it is not necessary for SPDs to be installed on a photovoltaic field or wind generator, as the case may be.

NOTE:

For photovoltaic generators, the blocking diodes and by-pass diodes must be able to support a reverse voltage compatible with the level of protection of the lightning protector, so that they do not get destroyed in case of over voltage (beware of the low reverse breakdown voltage of Schottky diodes).

Generally, cables entering and leaving a building (power, data, telephone) must be protected from over voltage by a connection to the local ground.
Remark: Even though an underground connection is less exposed to over voltage than an aerial connection, protection is still required.

IMPORTANT:

It is necessary to shield modem and telephone lines against the effects of lightning. If the distance between the protection and the ground is more than 50 cm, the protection provided by a SPD will not be efficient.

- ***Choice of SPD on DC current circuit (photovoltaic field connection)***

The characteristics of Surge Protective Devices are determined by the following criteria:

Uc: the voltage must be selected so that the varistor does not let the current pass when the voltage is equal to the modules open circuit voltage (*Un > 1,4 x Uoc*).
Up: Level of protection: lower than 1,5 kV according to the level of the equipment to be protected.
In > = to 5 to 15 kA in wave 8/20 µs or *Imax* > = from 10 to 40 kA according to the desired protection level.

SPD's with integrated indication and thermal disconnectionthat avoid any risk of short circuit because of ageing, are preferred to zinc oxide varistors.

NOTE:

The gas spark-gap must be as prescribed in DC circuit; should its arc voltage be too weak, it could not switch off when needed.

- ***Choice of SPD on AC circuit:***

(example: Connection between Generating unit / Household, on-grid / inverter or wind generator / charger)

The SPD type (unipolar or bipolar) depends on the ground connection scheme.
For a remote site, the neutral is generally **TNS** type.
For a grid-connected RES system, the neutral is generally **TT** type.

(A description of the characteristics of the TNS and TT designs are given in Annex)

4.2.3 Wiring Arrangements

A magnetic field caused by lightning generates loops with over voltage being proportional to the intensity of the strike on the loop surface and position. The severity is inversely proportional to the distance of the point of impact.

To limit the induced voltage, wiring dispositions must accommodate two types of induction loop:

- ***Loop induced by the active drivers:***

Photovoltaic generators are generally several serial connected photovoltaic modules. When lightning strikes, a voltage is created between the positive line and the negative line of the system. In most unfavourable cases, an induced voltage is created on each module that is in addition to the voltage in the loop constituted by the whole array.

This induced voltage is transmitted directly to DC input of the electric components where it may cause damage.

Consequently, when modules are wired, it is necessary to be careful not to make an outer loop. For example, when placing the drivers of positive and negative polarities together in parallel, it is important to keep the dimension of the loop surface as small as possible. (see Figure 6).

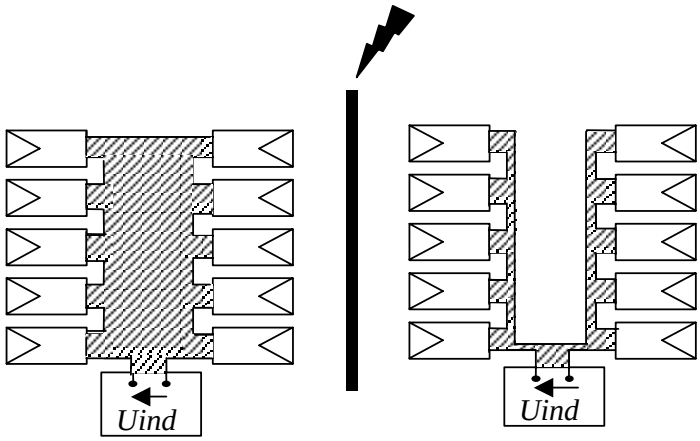

loop surface

Figure 6: Modules wiring: bad (left) and good (right)

- ***Loop induced by the active wires and ground conductor:***

A loop can form between the active DC circuit and the ground interconnection wire. (see Figure 7). An over voltage can cause a destructive breakdown of the electric components or photovoltaic modules.The recommendation is to install closely the active DC circuit wires and the ground interconnection wire .

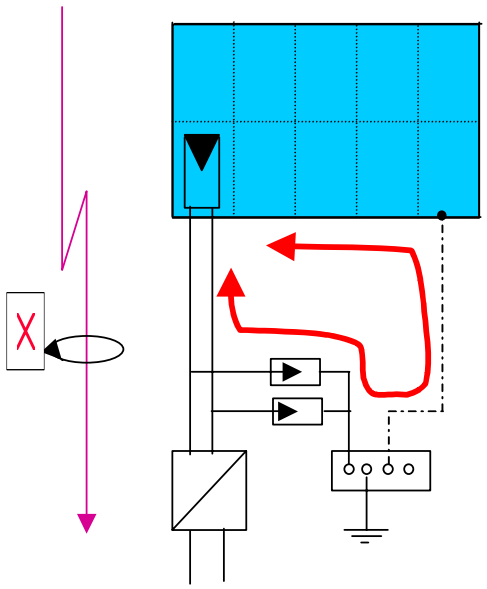

Figure 7: Beware of the ground loop

Consequently, it is important to be sure that the connecting wiring between the photovoltaic field and the electric components is insulated. A complementary protection such as standard shielding can increase the protection efficiency. This shielding can be carried out by using metal shoot connected to the ground (sensors side and building side).

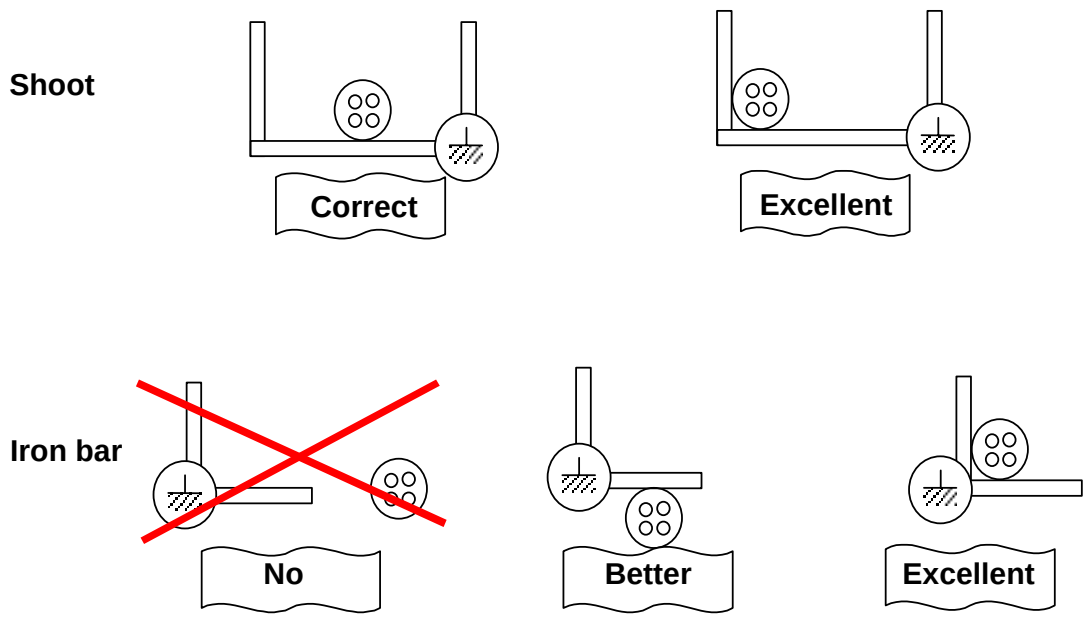

Figure 8: Position of the wiring

4.2.4 Shielding of the wiring cables

For very exposed installations including sensitive equipment as used in telecommunication, it is preferable and less expensive to make use of metal cable trays when cabling the drivers, and to connect them at least on both sides, to the ground (see above) rather than using shielded cables between photovoltaic field and electronic components.

4.3 Lightning risk evaluation for PV installations

The need for installing a SPD or lightning protection device to protect RES system equipment depends on the following elements:

- Lightning risk
- Topography of the location
- Capacity of the various equipments to withstand over-voltage
- Value and importance of the equipment to protect
- Consequences in case of power failure

A method of evaluation of the lightning risk inspired by standard ENV 61024-1, is presented in the document published by the European Commission "Lightning and thermal over voltage protection in photovoltaic and solar thermal systems ".

5 Protection measures for PV installations

Empirical methods based on statistics and experiments allows evaluating the need for setting up protections against over potential situations. However, two levels of lightning protection measures for installations integrating RES have been defined:

Level A (common lightning risk)

- Interconnection between the exposed-conductive-parts and proper connection to the ground
- Protection by varistors In from 2 to 5kA (or Imax from 6 to 15kA) on external connections (DC and AC circuits)
- Specific protection on other external lines (telephone...)

Level B (high lightning risk)

- Interconnection between the ground conductor and proper connection to the ground
- Protection by varistors In from 10 to 15kA (or Imax greater than 40kA) on DC connections
- Protection staged on AC aerial grid (if present)
- Specific protection on other external lines (telephone...)
- External protection with capture device
- Shielding of the sensitive cables

Table 1 provides an indication of the level of protection required for the various applications listed in the first column. The level of protection is given as an indication only. For very exposed sites, it will be necessary to increase the level of protection.

Table 1: Recommended protection levels

Protection level	**A**	**B**
Solar home system		
Isolated household	**X**	
Mountain hut		**X**
Radio relay		**X**
Hertzian beam		**X**
Pumping system	**X**	

Economical aspects

The cost of protection normally is a small fraction of the total system cost (1 - 3%). Where the risk of a lightning strike is other than negligible, it is wise to ensure that the protection system installed is effective and reliable.

6 Case studies

Seven practical cases are given hereafter as examples for the choice and the implementation of the protection.

6.1 Solar home power supply system (SHS)

Example:

Characteristics • General configuration	Stand alone and low power PV generator: • One or two modules of 50 Wp, on the roof or on a pole near the house • Battery voltage: 12 V
• Application	Remote households
• Location	Valley
• Prejudices in case of failure	Low
• Devices to be protected	Regulator, loads 12 V (low cost)
• Prejudices in case of failure	Low

Recommended protection measures against lightning effects	None

Conclusion	Currently SHS are low power generators close to the house with a low over voltage risk so they are generally without protection against lightning, the potential damages costs being low. Nevertheless, if the location presents a high risk, the protection device is the same as for the next example (radio relay with PV) but without the lightning conductor.

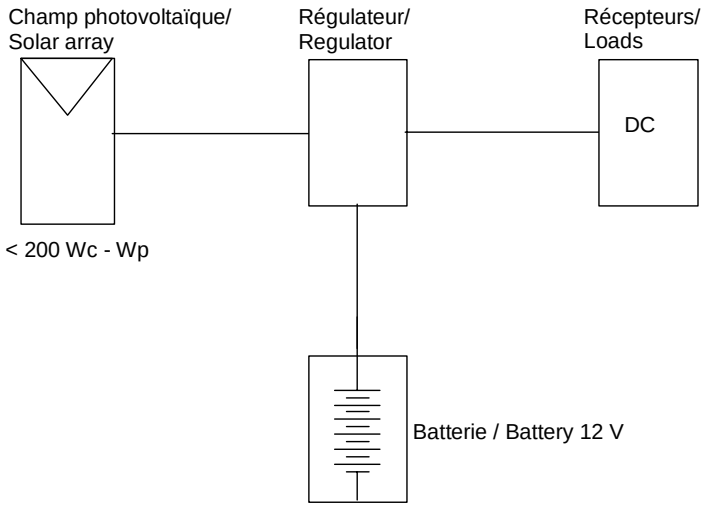

Scheme 1: General SHS configuration

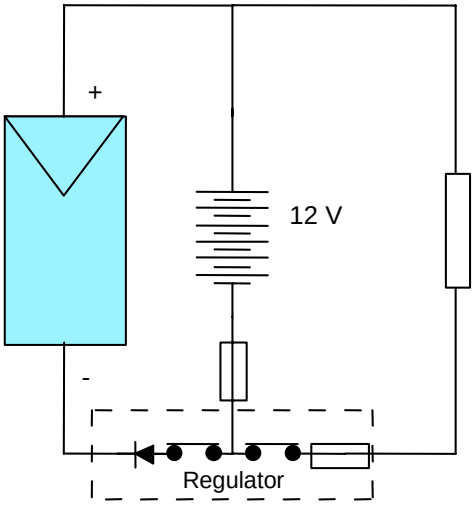

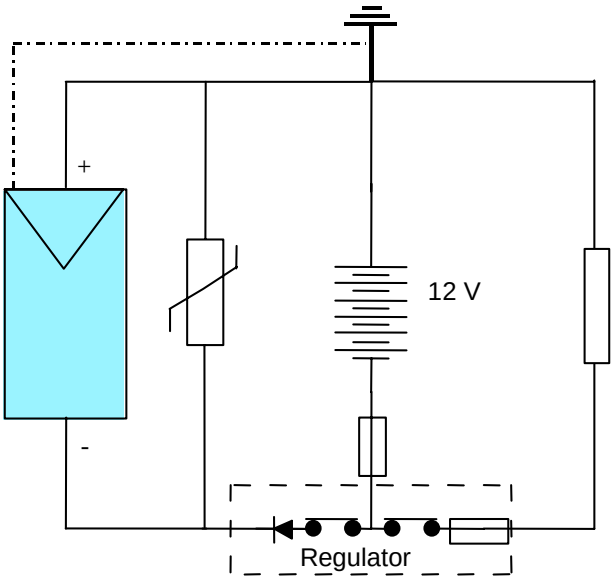

Scheme 2 (left): Electrical configuration when location non exposed to lightning risk

Scheme 3 (right): Electrical configuration when location exposed to lightning risk

6.2 Isolated household power supply system.

Example:

Characteristics	
• General configuration	Stand alone and medium power PV generator (1 to 2 kWp) • Modules on the ground around 30 m away from the house • battery voltage: 24 V
• Application	Remote household power supply
• Location	Valley
• Devices to be protected	Regulator, inverter, 24 V or 240 V receptors (high value)
• Prejudices in case of failure	Low

Recommended protection measures against lightning effects	• Interconnection of the metal parts with a buried 25 mm² bare copper cable between the modules and the regulator. Inverter, charger and PV generator inter connections.
	• Ground connection of the metal parts
	• Polarity + connected to ground
	• SPD on D.C circuit:
	  • bipolar in the junction box
	  • unipolar in regulator
	  • modular zinc oxide varistors with integrated default indication and thermal disconnection
	• Characteristics: *Uc*: 100 V, *Up*= 300 V, *In*= 2 kA
	• SPD on A.C circuit: Modular type for TNS regime on both sides of the genset/household connection (if the genset is in a distant technical room)
	• SPD on telephone line input with ground connection
	• Non-critical ground value

Conclusion	Due to the medium lightning risk, protection level A will be needed

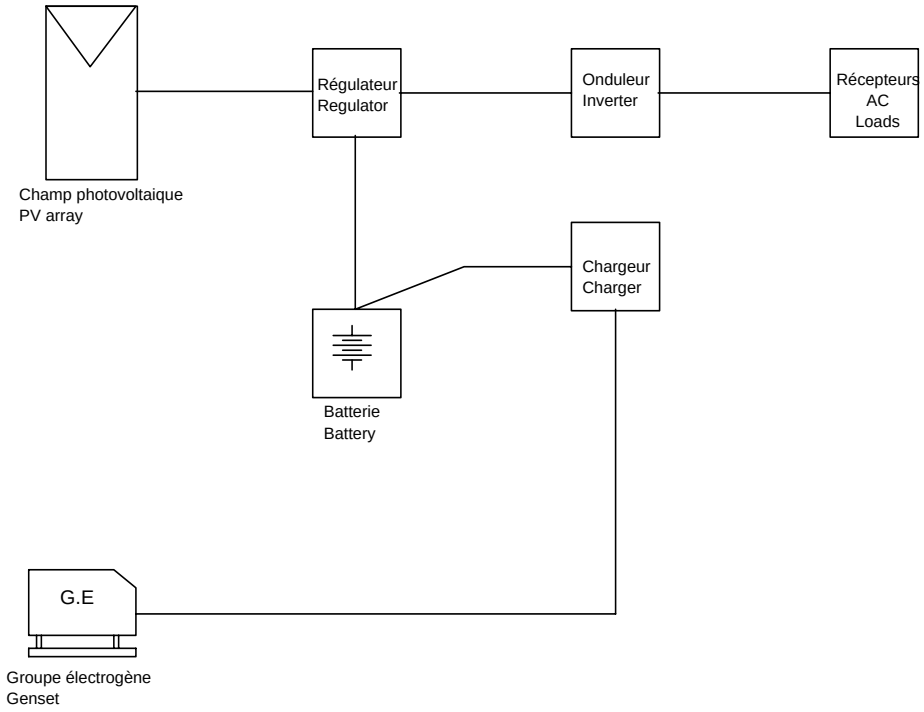

Scheme 4: General PV Household generator configuration

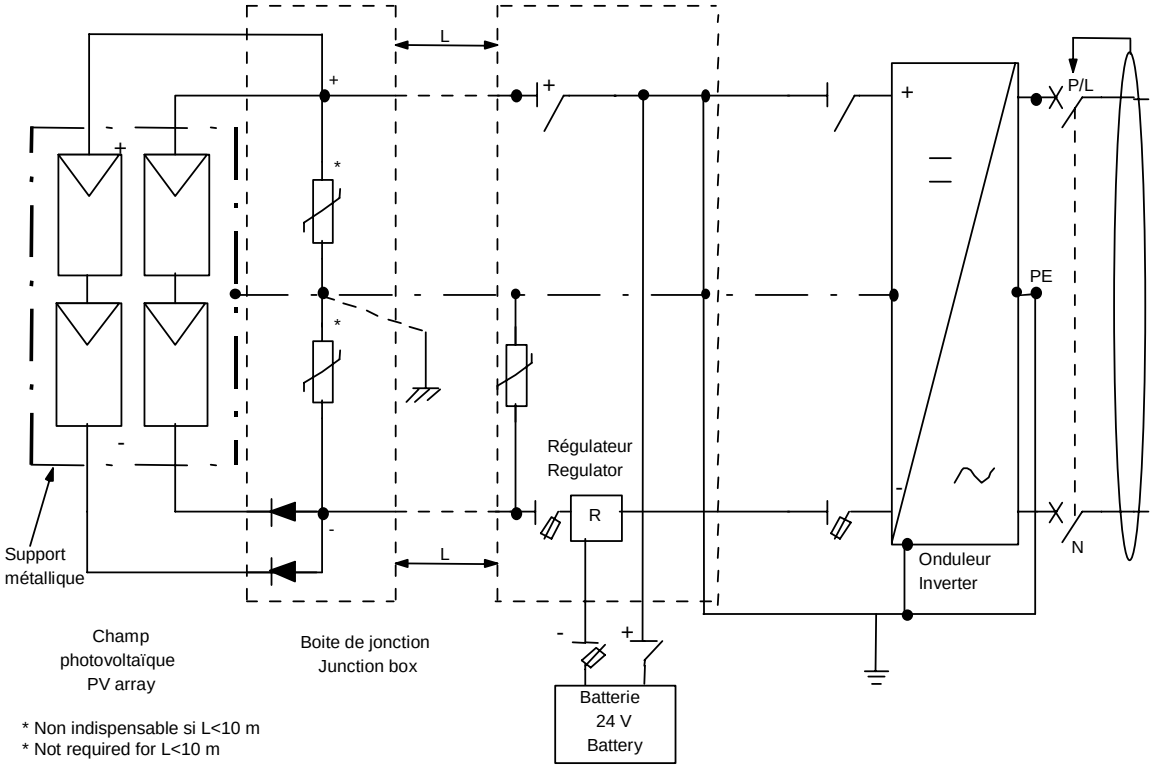

Scheme 5: PV Household generator electrical configuration (example)

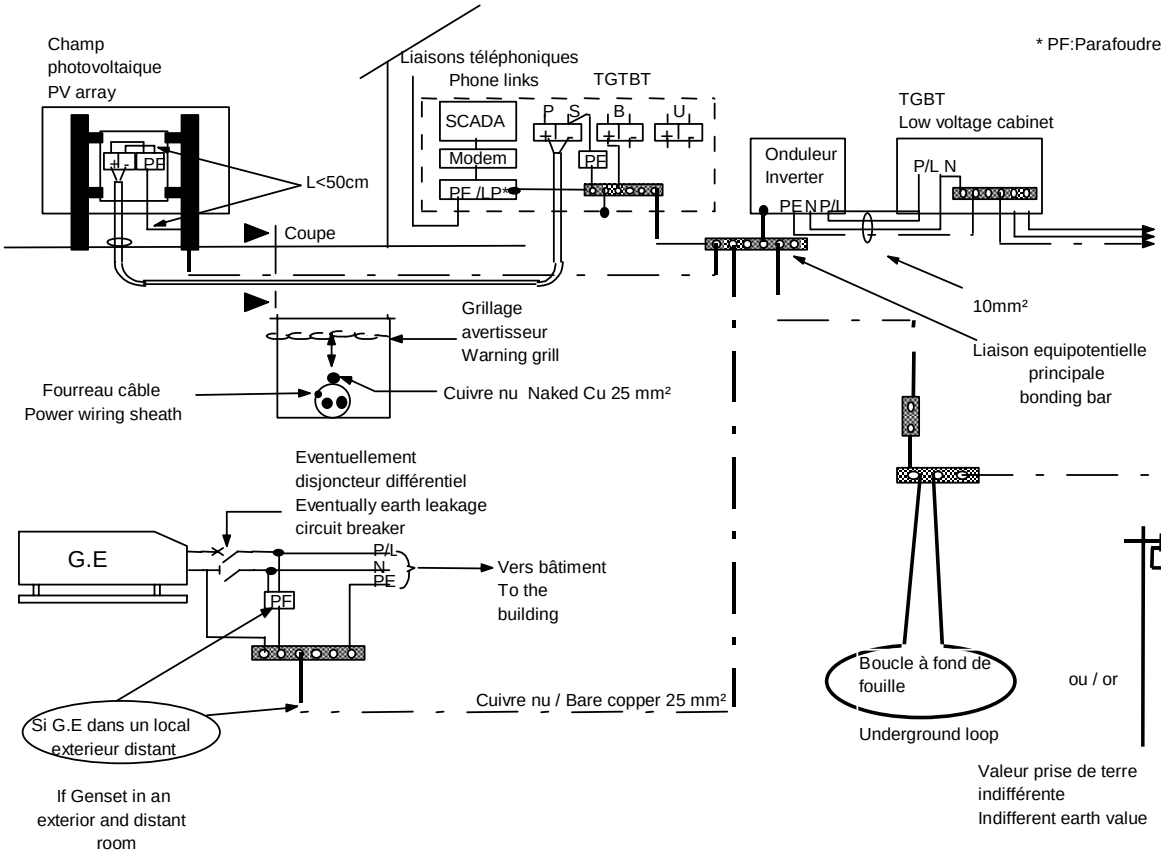

Scheme 6: PV Household generator physical configuration (example)

6.3 Mountain hut power supply system

Example:

Characteristics • General configuration	Stand alone and medium power PV generator (1 to 2 kWp): • Modules on the roof • Battery voltage: 24 V
• Application	Remote mountain hut power supply
• Location	High mountain (2 000 m)
• Devices to be protected	Regulator, inverter, 24 V or 230 V receptors (high value)
• Prejudices in case of failure	High (shipping cost: high (helicopter))

Recommended protection measures against lightning effects	• Provide external lightning protection based on the mesh method (mesh cage on the building so that the PV modules are in the protection zone).
	• Use a 25 mm² bare copper cable to interconnect metallic components such as the modules, regulator, inverter, charger, genset.
	• Ground connection of the metal parts
	• Interconnection between the building's and lightning conductor's ground
	• Polarity + connected to exposed-conductive-part and ground
	• SPD on D.C circuit:
	  • bipolar in the junction box
	  • unipolar in regulator cabinet
	  • modular zinc oxide varistors with integrated default indication and thermal disconnection
	• Characteristics: *Uc*: 100V, *Up*= 450V, *In*= 10kA
	• SPD on AC current circuit: Modular TNS type on both sides of the genset/household connection (if the PV generator is in a distant technical room)
	• SPD on phone line entry with ground connection
	• Non-critical ground value

Conclusion	Due to the high lightning risk, protection level b will be needed.

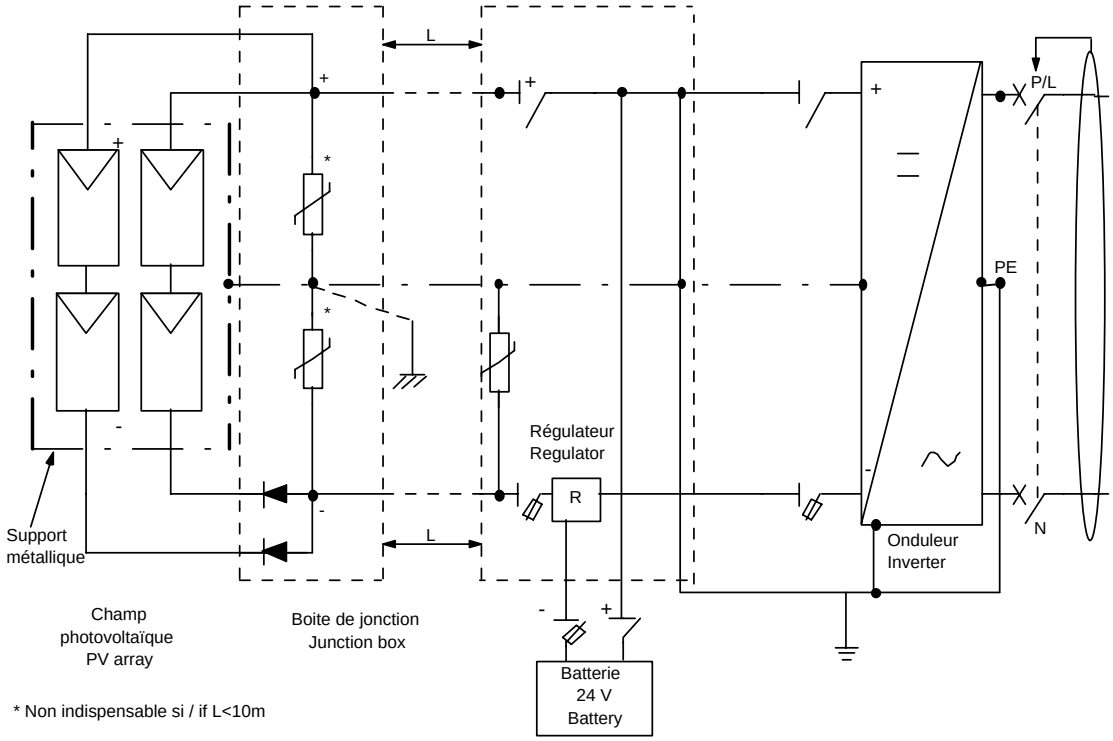

Scheme 7:PV Generator for Mountain hut: electrical configuration (example)

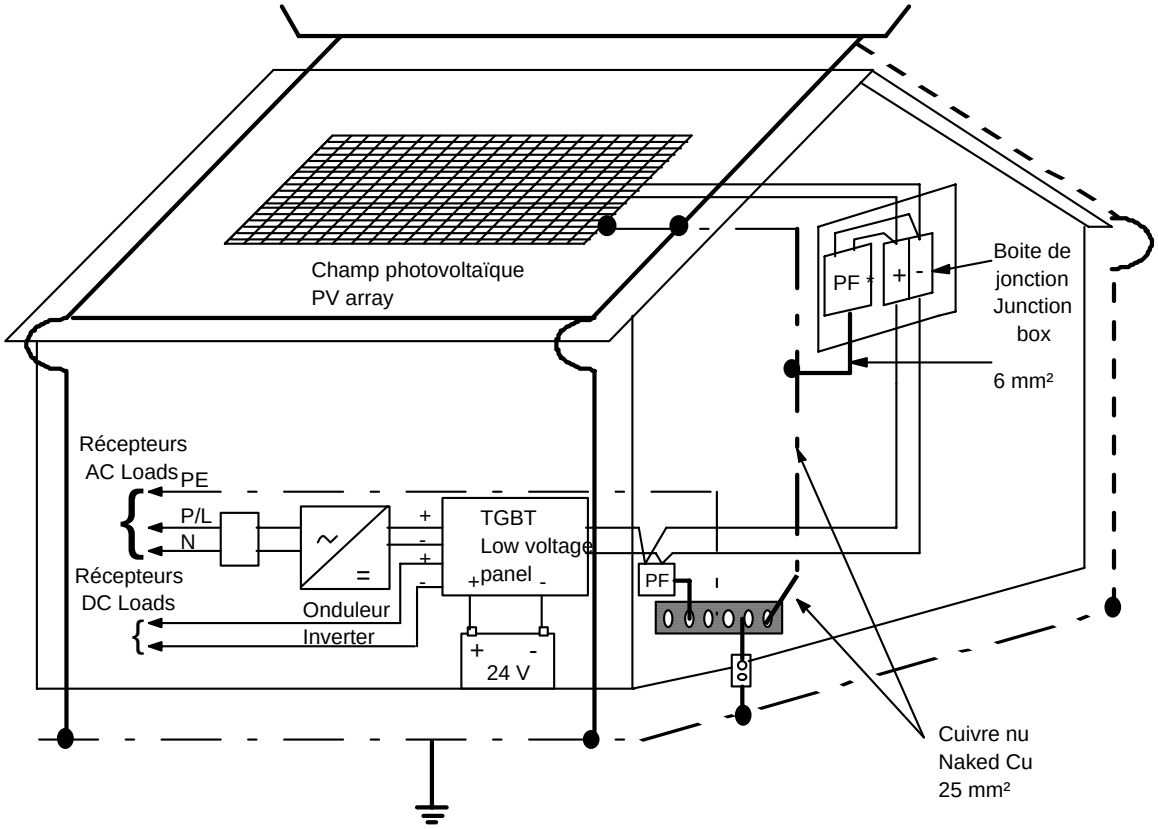

Scheme 8: PV Generator for Mountain hut: physical configuration (example)

6.4 Radio relay power supply system

Example:

Characteristics	
• General configuration	Stand alone and low power PV generator (200 Wp): • Modules fixed on a pole • Battery voltage: 12 V (-) to the ground
• Application	Remote radio relay power supply on metallic pole
• Location	On high pole
• Devices to be protected	Regulator, telecom devices (high cost)
• Prejudices in case of failure	High

Recommended protection measures against lightning effects	• Use the metallic pylon as a lightning conductor
	• Lightning conductor crossroads ground connection
	• Locate modules on the pylon in the SPD protection zone
	• Interconnect metal components with 25 mm² bare copper cable in between photovoltaic field and regulator.
	• Polarity - connected to exposed-conductive-part and ground
	• SPD on D.C circuit:
	  • bipolar in the modules junction box (if the PV array/regulator distance connection is > 10 m)
	  • unipolar in regulator cabinet
	  • modular zinc oxide varistors with integrated default indication and thermal disconnection
	• Characteristics: *Uc*: 100 V, *Up*= 450 kV, *In*= 10 kA
	• The lowest but non-critical ground value
	• Interconnection of the lightning conductor and equipment's ground.

Conclusion	Due to the high lightning risk, protection level B will be needed.

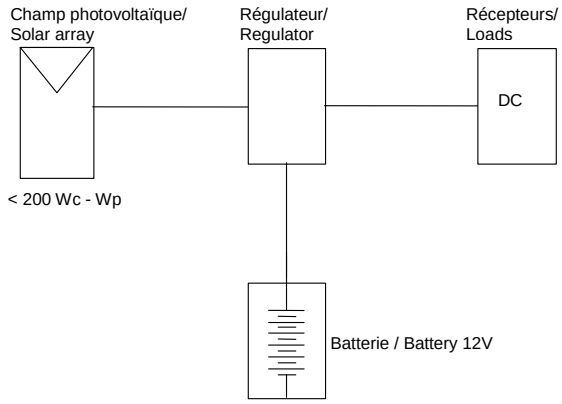

Scheme 9: Radio relay power supply system : general configuration

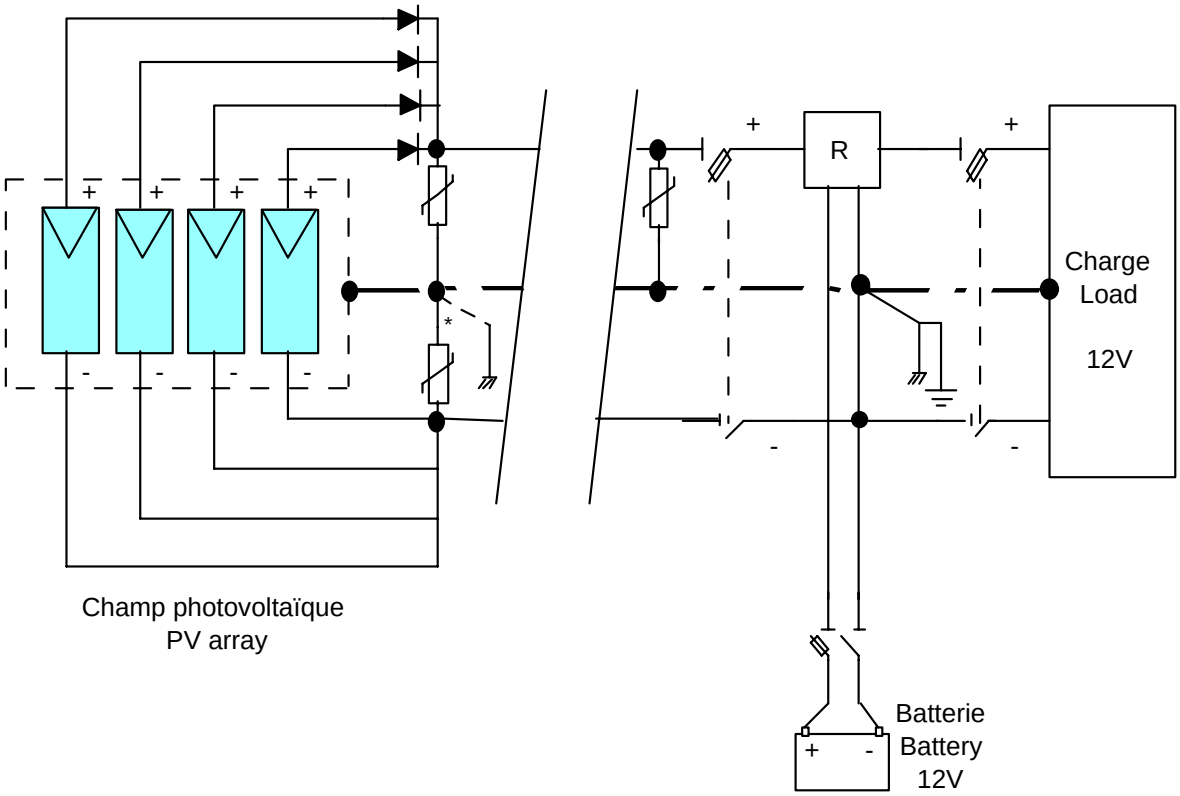

Scheme 10: Radio relay power supply system: electrical configuration (example)

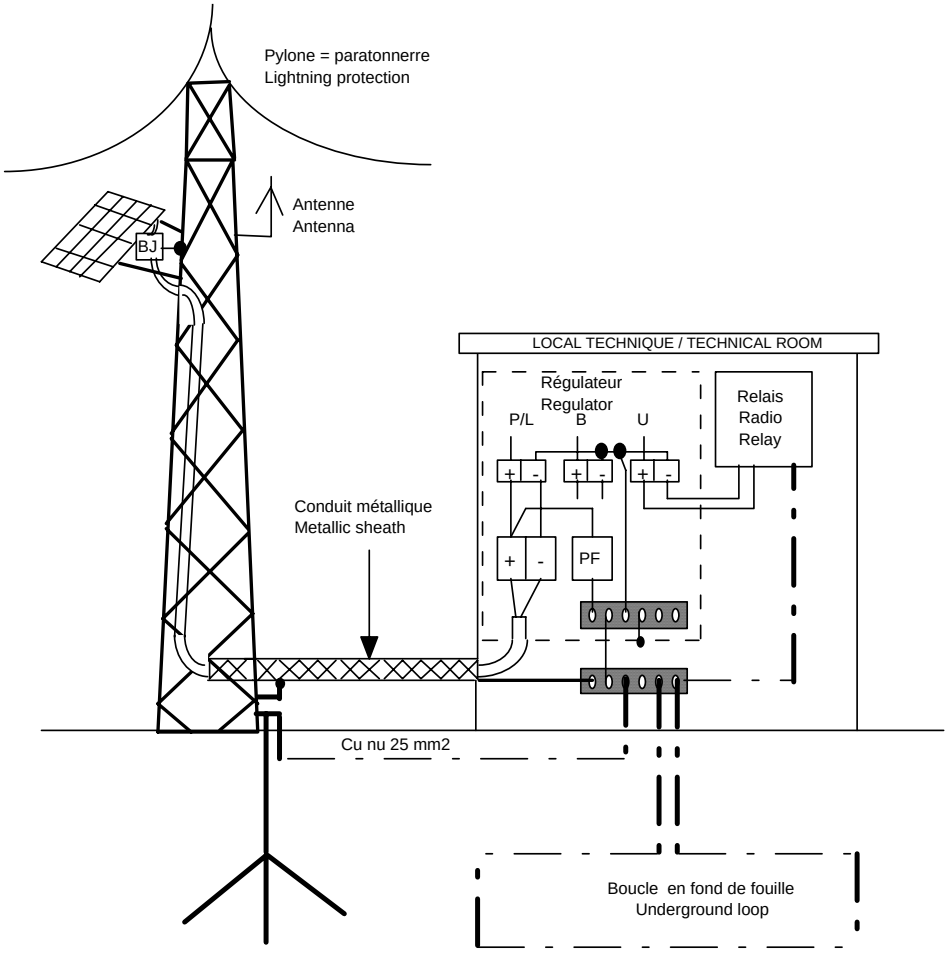

Scheme 11: Radio relay power supply system: physical configuration

6.5 Hertzian beam power supply system

Example:

Characteristics	
• General configuration	Stand alone and medium power PV generator (1 000 up to 2 000 Wp): • Modules on the ground, 30m distant from the technical building • Battery voltage: 48 V (+) to the ground
• Application	Remote hertzian beam power supply with antennas on metallic poles
• Location	High point
• Devices to be protected	Regulator, telecom devices (very high value)
• Prejudices in case of failure	Very high

Recommended protection measures against lightning effects	• Use of the metallic pylon as lightning conductor
	• Crossroads lightning conductor ground connection
	• Setting of modules on the pylon in the lightning conductor protection zone
	• Interconnection of the metal parts with 25 mm² bare copper cable (or 30 X 2 mm² blade copper) between photovoltaic field and regulator.
	• Metallic shoot wiring connected to the exposed-conductive-part on both sides
	• Interconnection of the exposed-conductive-parts between equipment
	• Foundation ground electrode of the building
	• Exposed-conductive-parts connection to ground in technical room
	• Polarity + connected to exposed-conductive-part and ground
	• SPD on D.C circuit:
	  • Bipolar in the modules junction box
	  • Unipolar in regulator
	  • modular zinc oxide varistors with integrated default indication and thermal disconnection
	• Characteristics: *Uc*: >125 V, *Up*= 450 V, *In*= 10 kA
	• The lowest but non-critical ground value
	• Interconnection of the lightning conductor and equipment's ground electrode.

Conclusion	Due to the high lightning risk, protection level B will be needed.

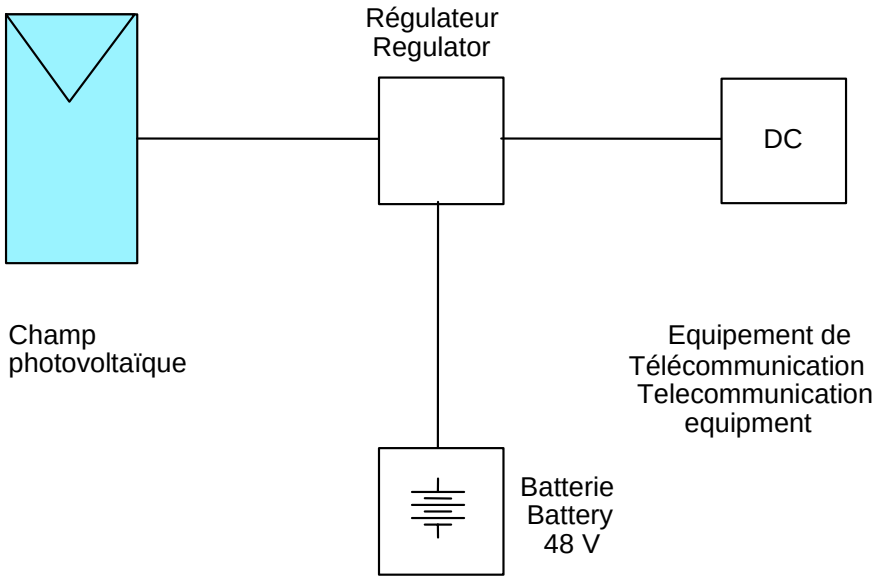

Scheme 12: Hertzian beam power supply system: general configuration

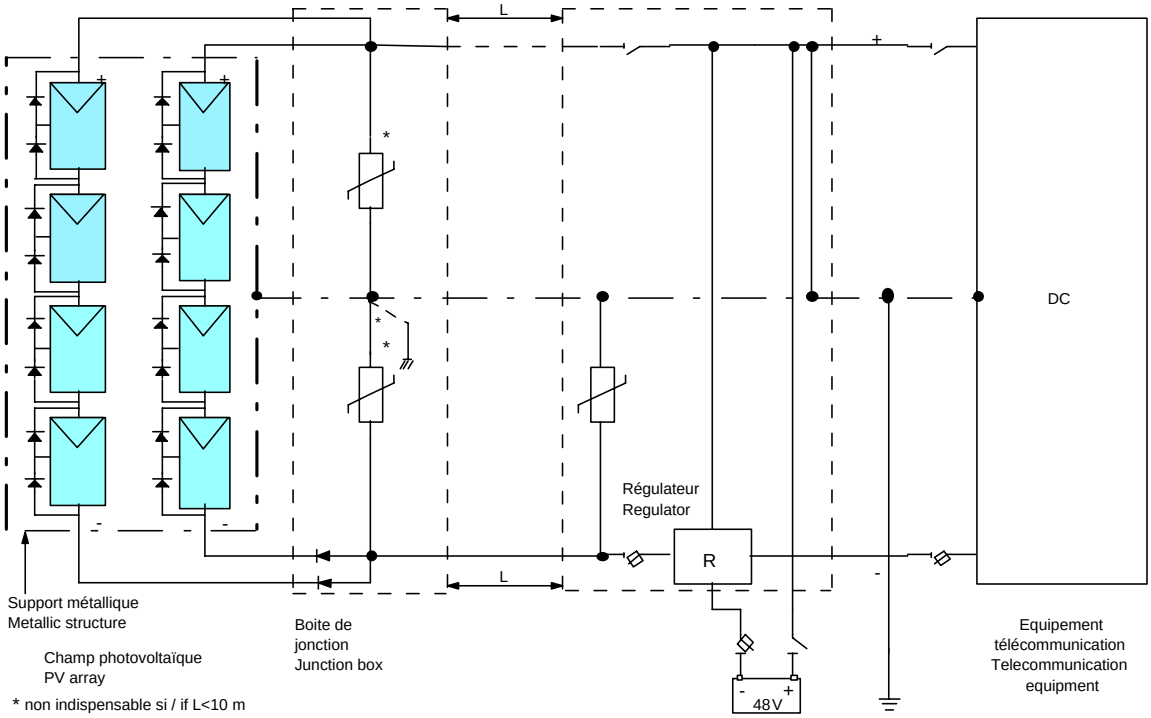

Scheme 13: Hertzian beam power supply system: electrical configuration (example)

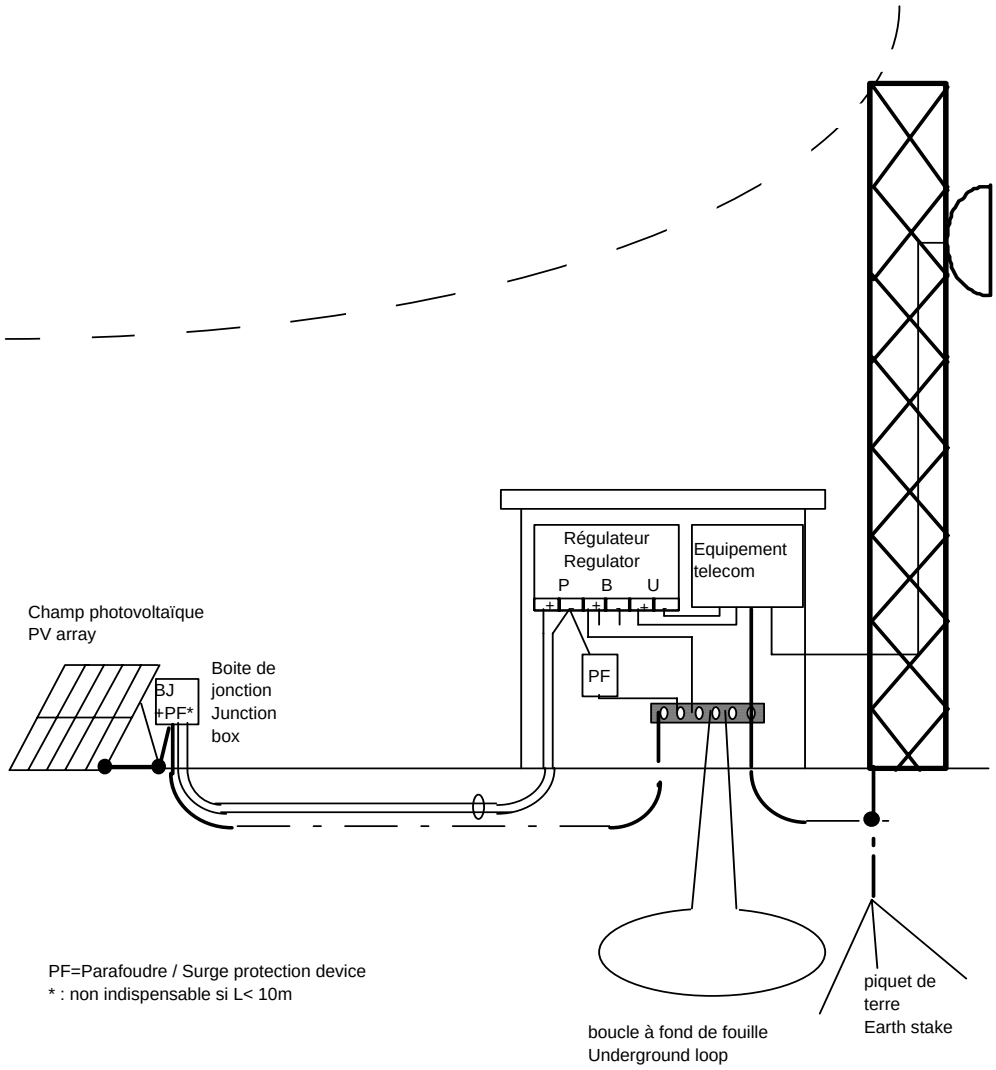

Scheme 14: Hertzian beam power supply system: physical configuration (example)

6.6 Pumping power supply system

Example:

Characteristics	
• General configuration	Stand alone and medium power PV generator (i.e. 1600 Wp) for pumping without electricity storage: • modules on the ground 20 m distant from of the pumping station • generally 8 modules in series • variable frequency and voltage inverter (range 0 to 80 V) fixed on the back of the modules • water tank storage with level probes
• Application	Village water supply in emerging economy countries
• Location	Plain
• Devices to be protected	PV array, inverter (medium financial value)
• Prejudices in case of failure	Important

Recommended protection measures against lightning effects	• Interconnection of the exposed-conductive-parts with 25 mm² bare copper cable on the structure between photovoltaic field and inverter. • Connection to ground of the engine's metal part through the protection conductor in the power supply cable (4 conductors including 1 green yellow conductor) • Connection of the metal parts to the ground with an ground post (if cable unburied) • Non-critical ground value • Polarity + connected to the exposed-conductive-part and ground in inverter input (if not floating) • SPD on DC circuit: • Bipolar in modules junction box (if the distance between the photovoltaic field and inverter cable > 10 m) • Unipolar in the inverter (bipolar if floating) • zinc oxide varistors (characteristics: *Uc*: >250 V, *Up*= 1,5 kV, *In*= 5 kA) • SPD on AC circuit: • Tripolar on inverter output if the distance between inverter and motor pump is >10m (zinc oxide varistors with the following characteristics: *Uc*: >240 V, *Up*= 1,5 kV, *In*= 5 kA), integrated thermal disconnection • Bipolar on the entry of level sounding probe cable (zinc oxide varistors with characteristics : *Uc* : >250 V, *Up*= 1,5 kV, *In*= 5 kA)
Conclusion	Due to the medium lightning risk, level **protection A** will be needed. N.B. For very exposed sites, complementary measures are recommended such as: • Setting of SPD on AC circuit for drilling head especially if the connection is > than 30 m and the interconnection of the exposed-conductive-parts made with 25 mm² bare copper cable • Setting of tight strands around the modules field in order to protect it, with interconnection to ground electrodes. • SPD with In>=10 kA

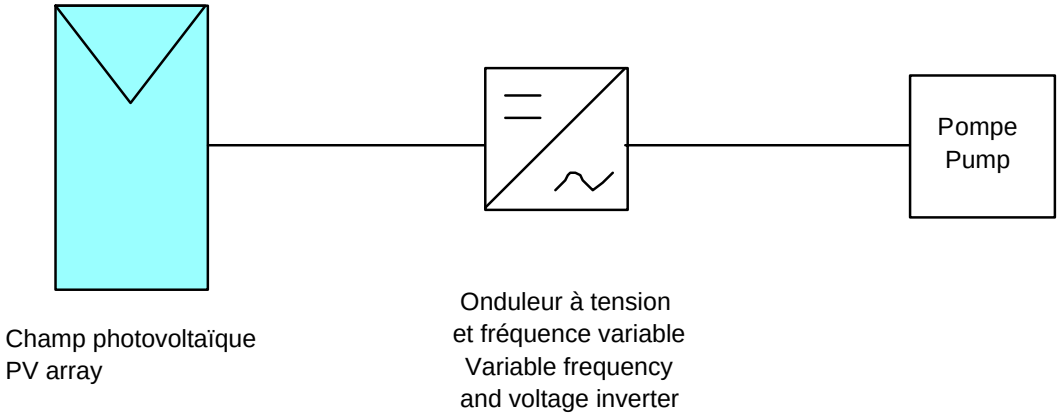

Scheme 15: Pumping power supply system: general configuration

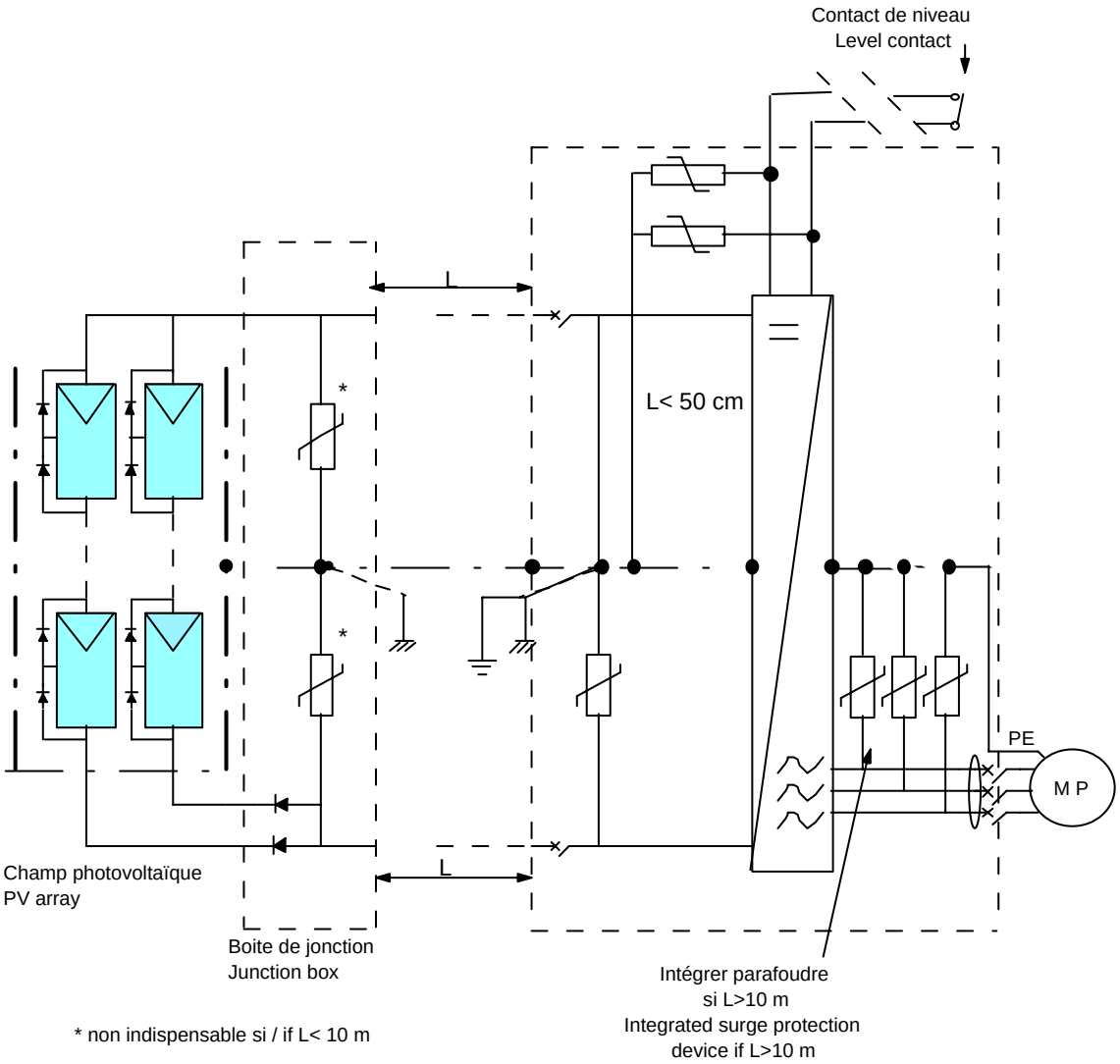

Scheme 16: Pumping power supply system: electrical configuration (example)

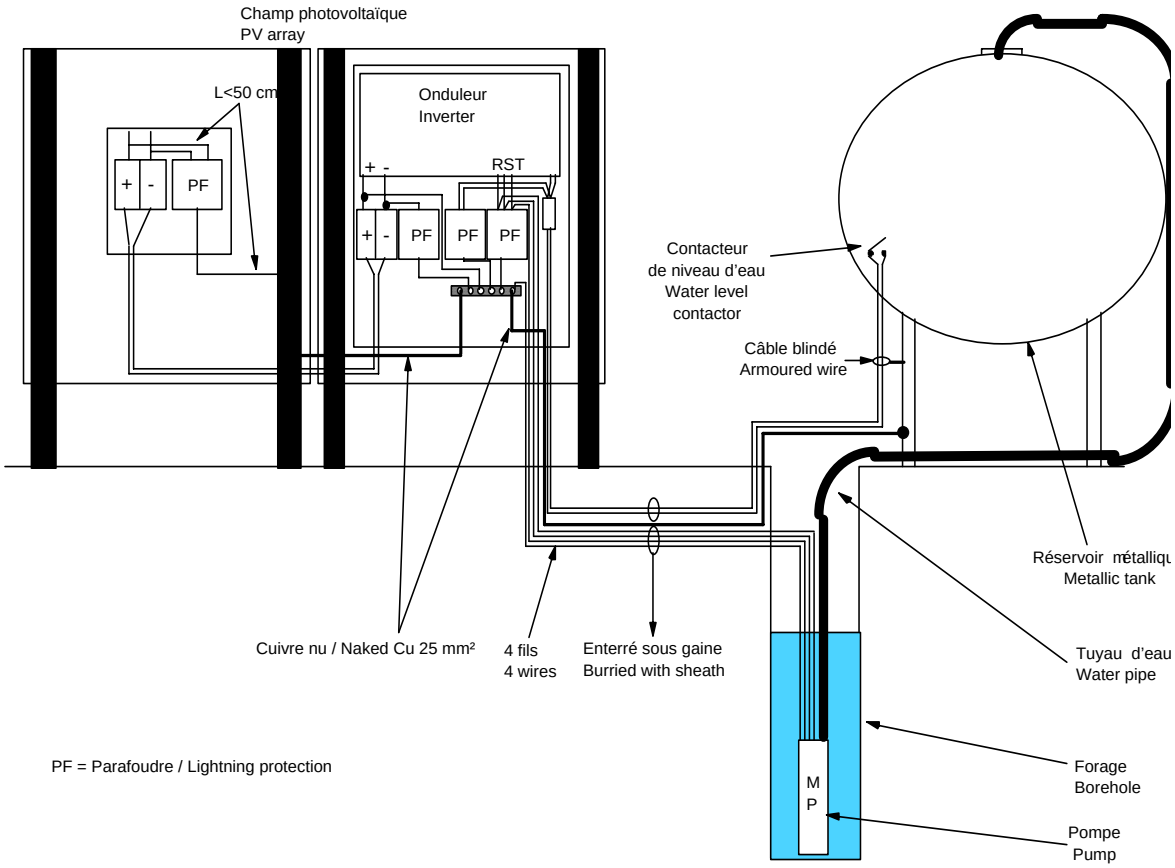

Scheme 17: Pumping power supply system: physical configuration (example)

7 Annex: Types of low voltage distribution systems earthing

(Figures are from IEC 60364-1)

Figure 9 to Figure 12 show examples of commonly used a.c. systems.
Figure 13 to Figure 16 show examples of commonly used d.c. systems.

Note : The codes used have the following meanings:

First letter – Relationship of the power system to earth:

T=direct connection of one point to earth;

I=all live parts isolated from earth, or one point connected to earth through an impedance.

Second letter – Relationship of the exposed-conductive-parts of the installation to earth:

T=direct electrical connection of exposed-conductive-parts to earth, independently of the earthing of any point of the power system;

N=direct electrical connection of the exposed-conductive-parts to the earthed point of the power system (in a.c. systems, the earthed point of the power system is normally the neutral point or, if a neutral point is not available, a phase conductor).

Subsequent letter(s) (if any) – Arrangement of neutral and protective conductors:

S = protective function provided by a conductor separate from the neutral or from the earthed line (or in a.c. systems, earthed phase) conductor.

C = neutral and protective functions combined an a single conductor (PEN conductor).

7.1 Type of system earthing for a.c. systems

TN systems

TN power systems have one point directly earthed, the exposed conductive parts of the installation being connected to that point by protective conductors. Three types of TN system are considered according to the arrangement of neutral and protective conductors, as follows:

- TN-S system: in which throughout the system, a separate protective conductor is used;
- TN-C-S system: in which neutral and protective functions are combined in a single conductor in a part of the system;
- TN-C system: in which neutral and protective functions are combined in a single conductor throughout the system.

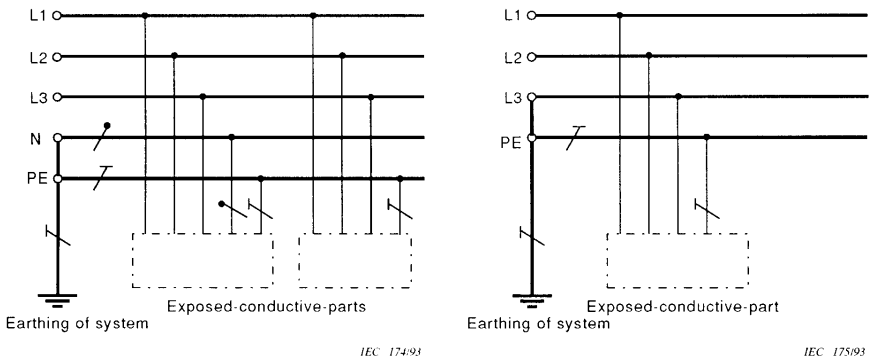

Separate neutral and protective conductors throughout the system

Separate earthed phase conductor and protective conductors throughout the system

Figure 9: TN-S system

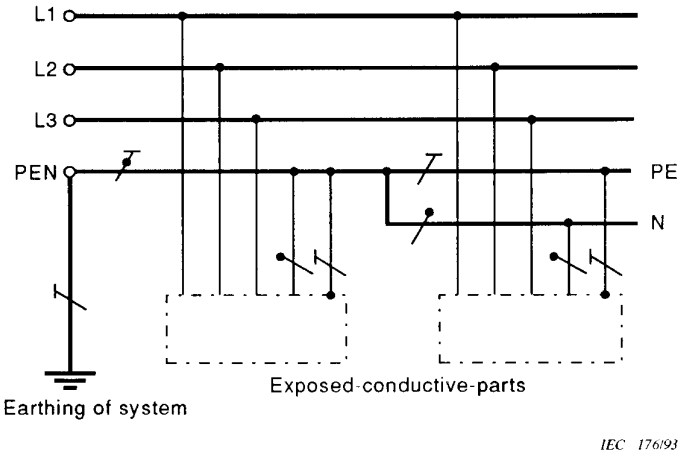

Figure 10: TN-C-S system. Neutral and protective functions combined in a single conductor in a part of the system

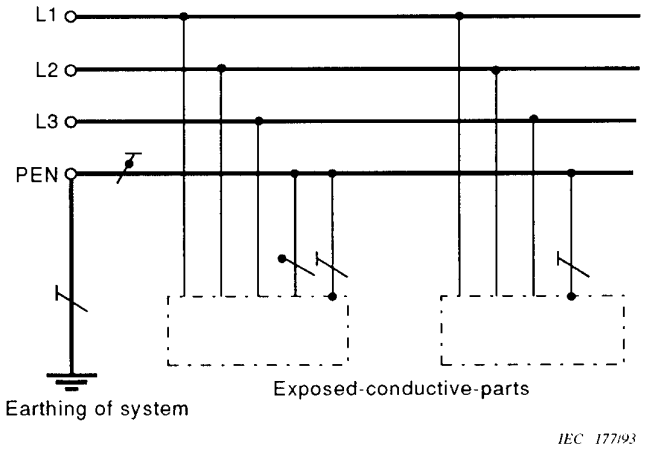

Figure 11 : TN-C system. Neutral and protective functions combined in a single conductor throughout the system

TT system

The TT power system has one point directly earthed, the exposed-conductive-parts of the installation being connected to earth electrodes electrically independent of the earth electrodes of the power system.

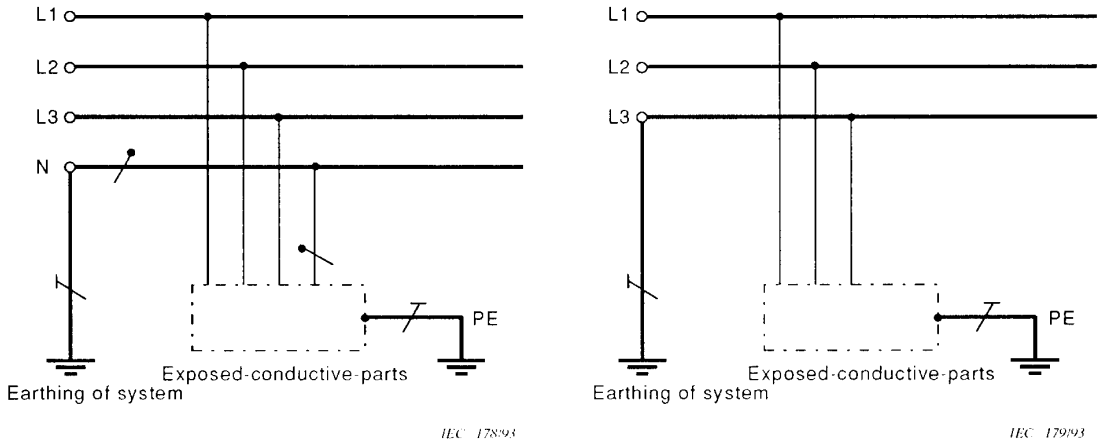

Figure 12 : TT system

7.2 Type of system earthing for d.c. systems

Note: In earthed d.c. systems electromechanical corrosion should be considered.

Where the following figures yy to yy show earthing of a specific pole of a two-wire d.c. system, the decision whether to earth the positive or the negative pole shall be based upon operational circumstances or other considerations.

TN systems

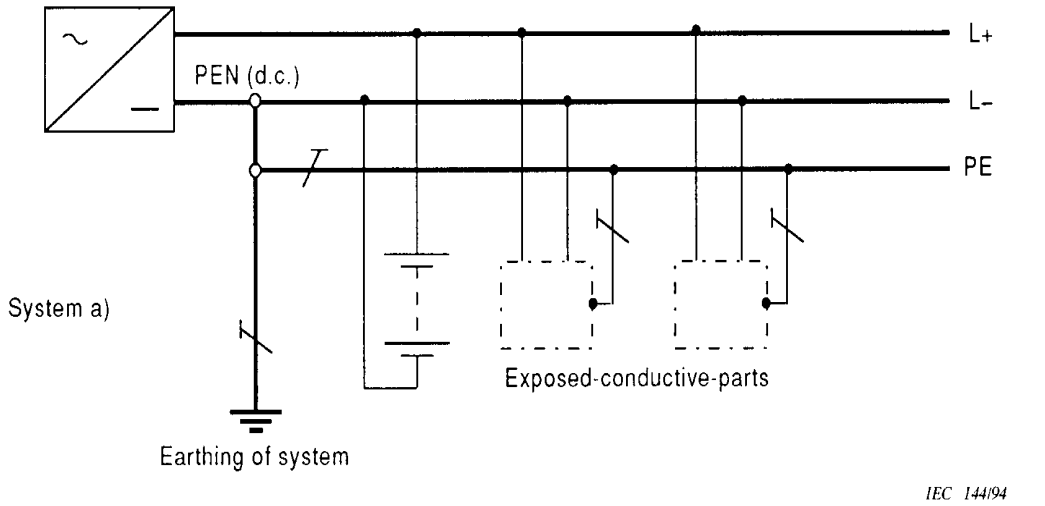

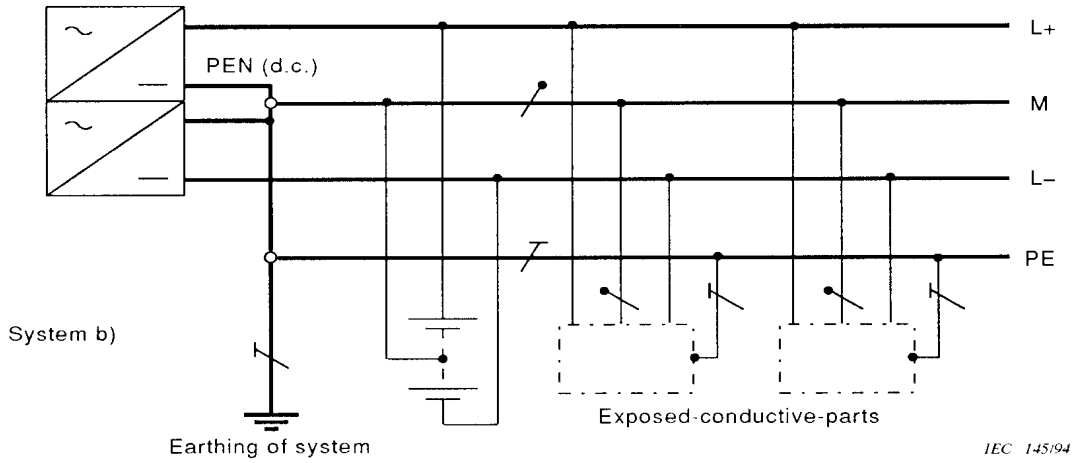

For symbols, see note to 312.2.1, page 13.

Figure 13 : TN-S d.c. system

The earthed line conductor (for example L in system a) or the earthed mid-wire conductor (M in system b) are separated from the protective conductor throughout the system.

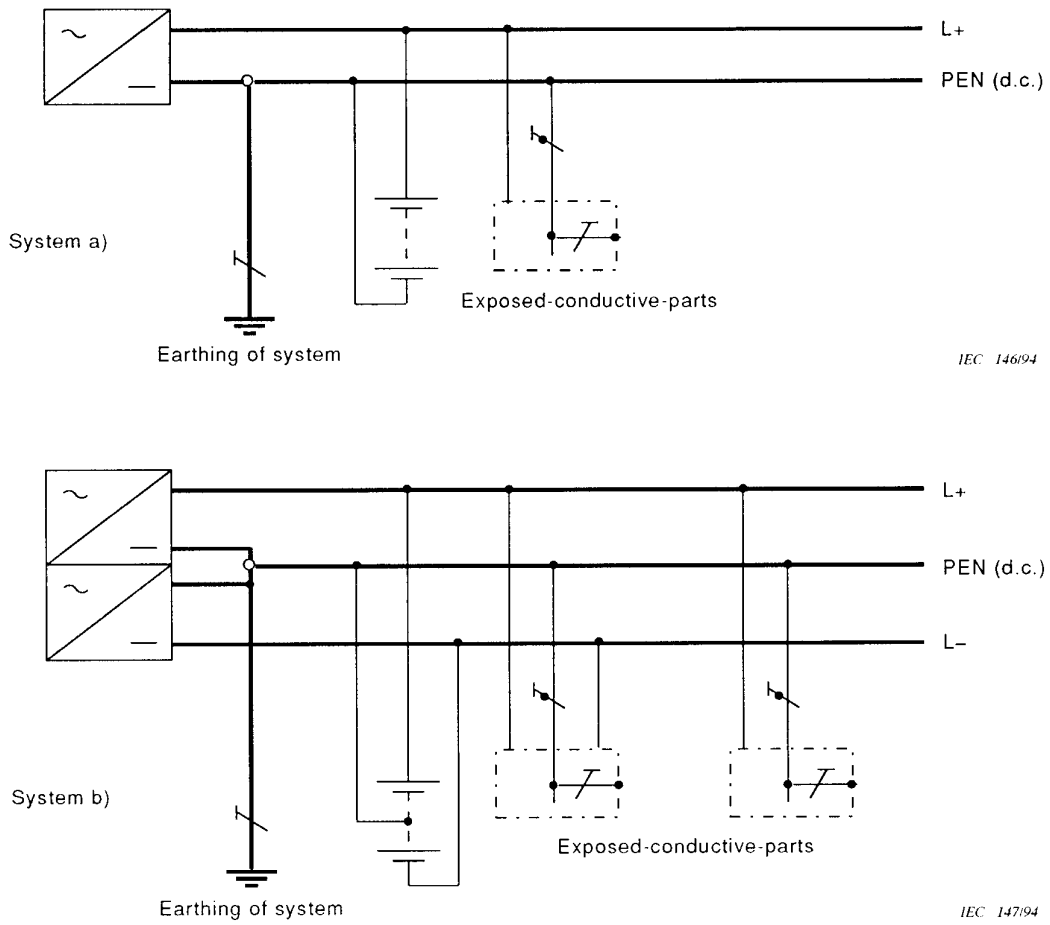

Figure 14 : TN-C d.c. system

The functions of the earthed line conductor (for example L-) in system a) and protective conductor are combined in one single conductor PEN (d.c.) throughout the system, or the earthed mid-wire conductor (M) in system b) and protective conductor are combined in one single conductor PEN (d.c.) throughout the system.

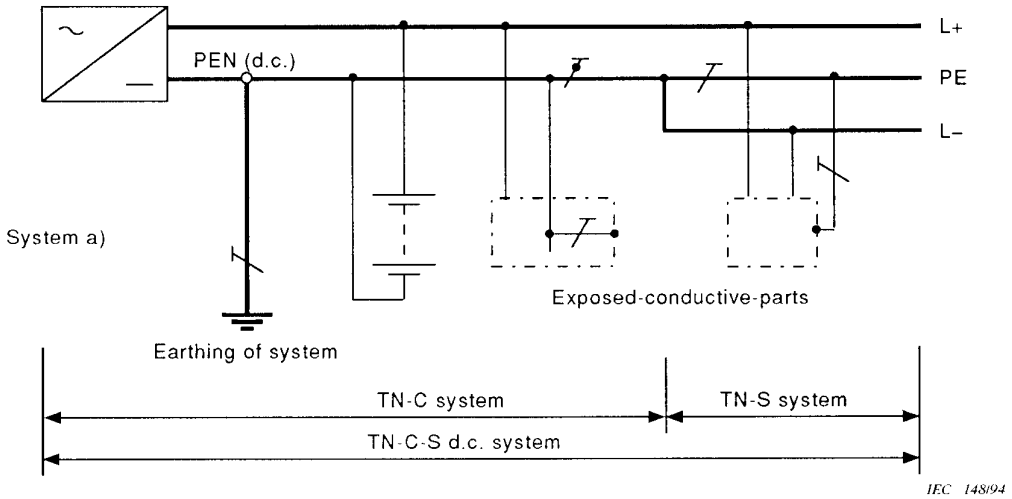

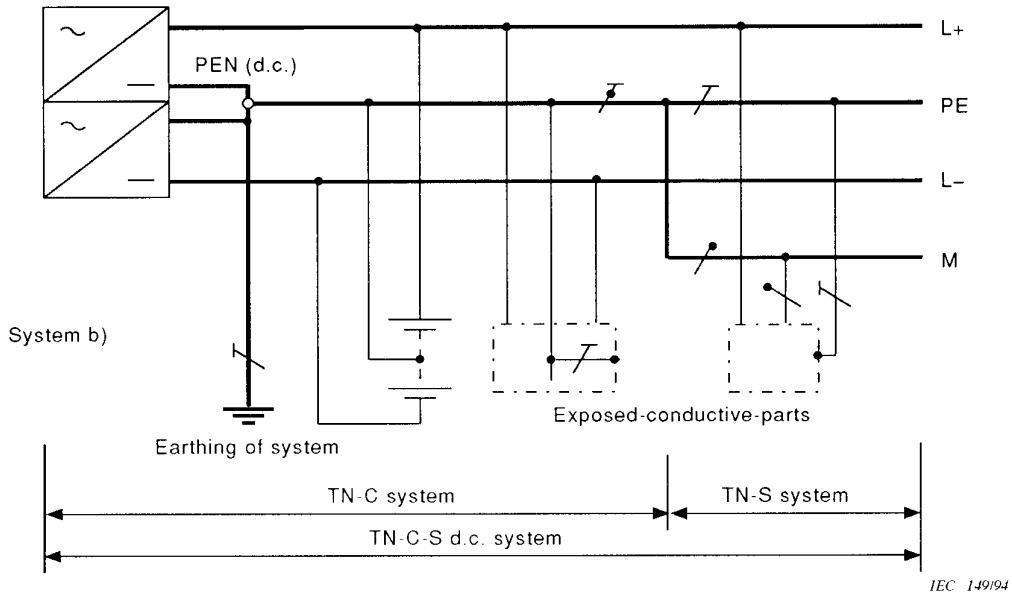

Figure 15 : TN-C-S d.c. system

The functions of the earthed line conductor (for example L-) in system a) and protective conductor are combined in one single conductor PEN (d.c.) in parts of the system, or the earthed mid-wire conductor (M) in system b) and protective conductor are combined in one single conductor PEN (d.c.) in parts of the system.

TT system

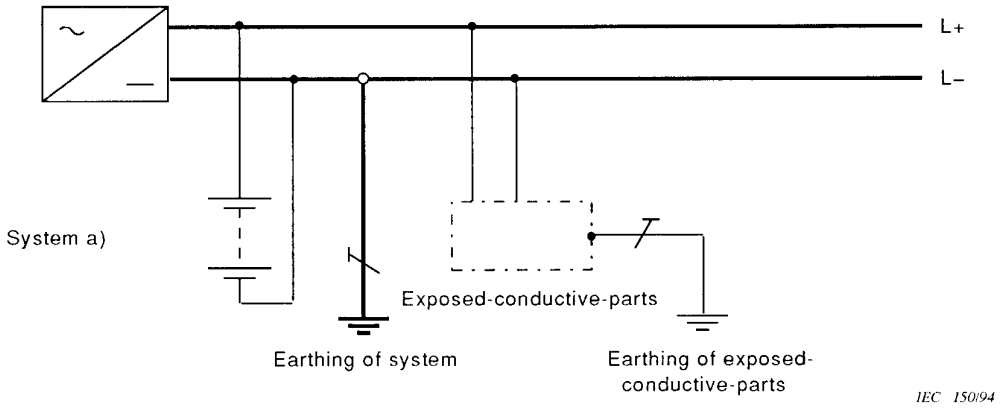

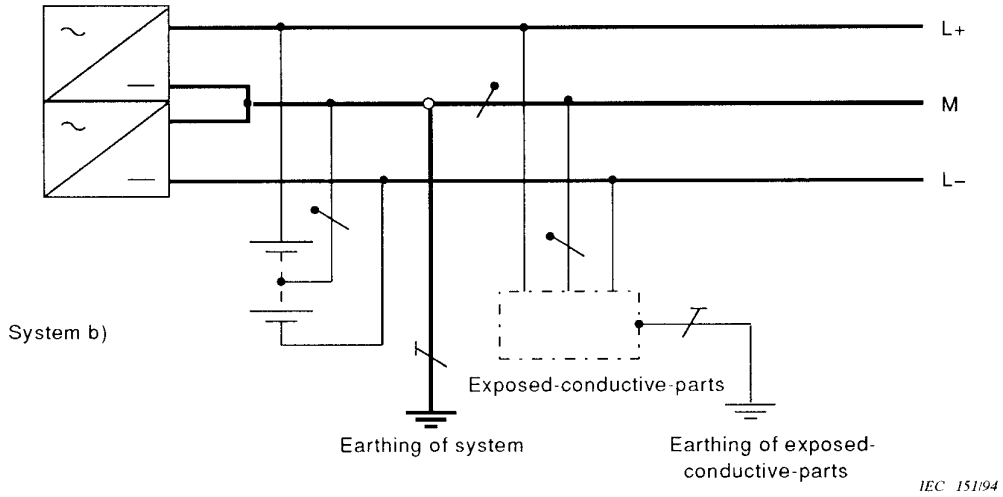

Figure 16 : TT d.c. system